D-00-5005-A

REVISIONS			
LTR	DESCRIPTION	DATE	APPROVED
A	OAH WAS 3.150/REVISED TOOLING #'S	23MAR02	NENT

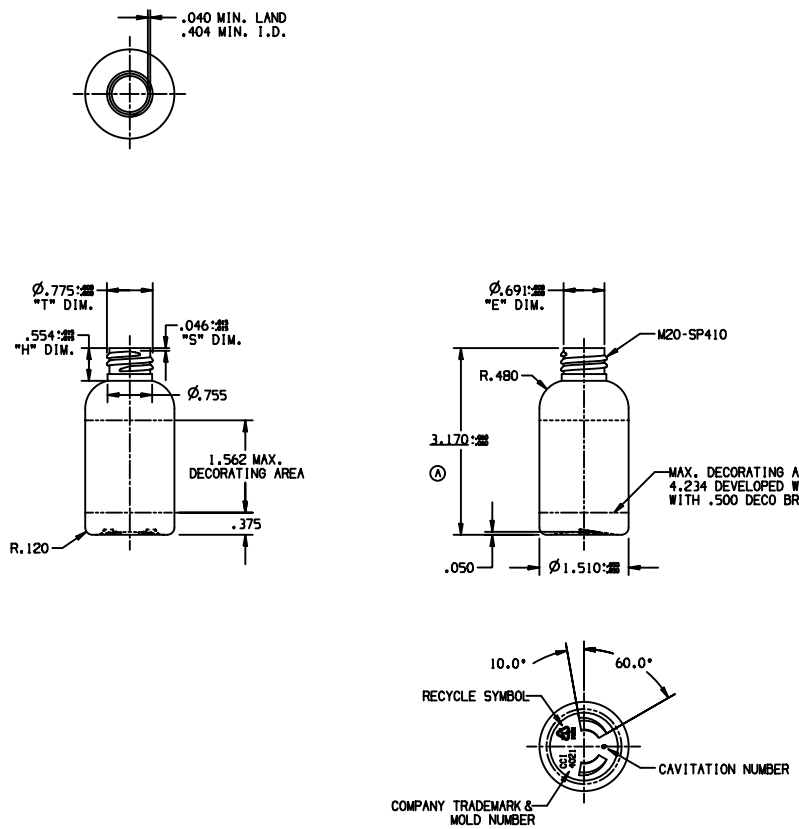

NOTES :

1) OVERFLOW CAPACITY : 2.33 ± .12 FL.OZ. (68.9 ± 3.5 CC'S.)

2) WEIGHT : 9.0 ± 1.0 GRAMS

NRFP

TEMPORARY DRAWING

THIS IS A SUGGESTED DESIGN THEME FOR CUSTOMER APPROVAL AND COMMENTS. FINAL SIZE AND SPECIFICATIONS TO BE DETERMINED AFTER THE PRODUCT IS MANUFACTURED.

DIMENSIONS SHOWN ARE:

☒ AS MOLDED ☐ AFTER TREAT

☐ AFTER TREAT & OVEN

THIS DRAWING HAS BEEN PREPARED BY SILGAN PLASTICS FOR OUR OWN PRODUCTION OF THE ARTICLE SHOWN AND MAY NOT BE COPIED OR UTILIZED BY OTHERS WITHOUT OUR PRIOR WRITTEN CONSENT.

DRAWN BY C.McELHANNON	MATERIAL PET	CUSTOMER	SILGAN PLASTICS CORP
DATE 16/Aug/00	LABEL DWG NO.	DESCRIPTION	2 FL.OZ. BOSTON ROUND
	PRD./CAV. NO. 1-14		
MODEL D-00-5005	REF. DWG. NO. PB0127		
IN.J. TOOLING NO. 4018	BLOW TOOLING NO. 4021	SILGAN PLASTICS CORPORATION	TECHNICAL CENTER 1858 MECA WAY NORCROSS, GA 30093
CAD UG	CODE NO. OOM 45110		
SCALE FULL	SURF. AREA 17.281 IN2	DRAWING NO.	D-00-5005-A